reveleus1

HARNESS LAYOUTS

CONTROL HARNESS.....HL-7
DOOR HARNESS.....HL-13
ENGINE HARNESS.....HL-5
FLOOR & AIR BAG HARNESS.....HL-3
MAIN HARNESS.....HL-1
TAIL GATE HARNESS.....HL-15

suzlever@gmail.com

MAIN HARNESS E5CCFC41

MAIN HARNESS (1)

HL-1

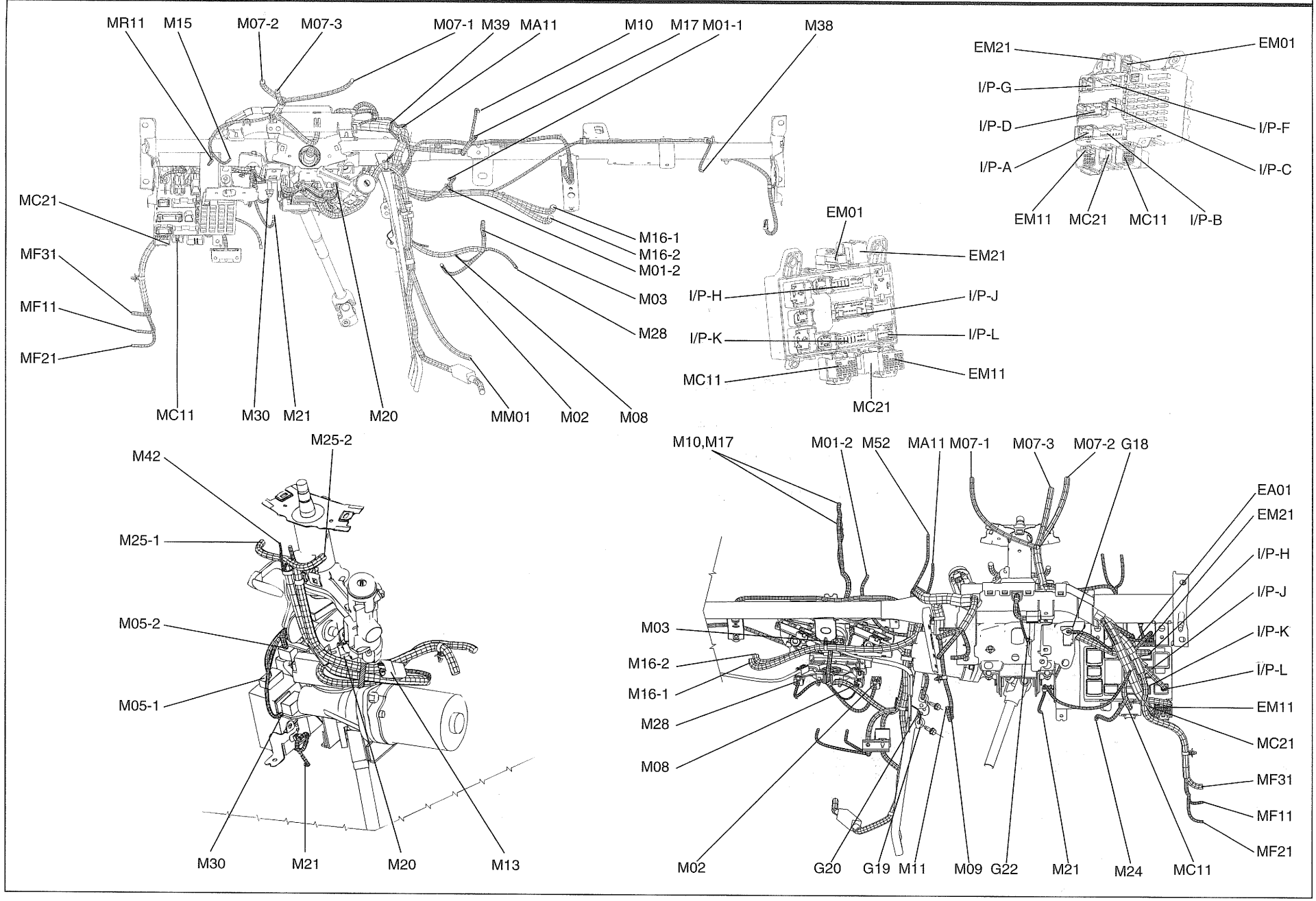

G5TBG001A

MAIN HARNESS (2)

MAIN HARNESS

M01-1	Audio
M01-2	Audio (Remocon)
M02	A/C switch
M03	Blower switch
M04	Buzzer
M05-1	EPS control module
M05-2	EPS control module
M06	Chime bell
M07-1	Instrument cluster
M07-2	Instrument cluster
M07-3	Instrument cluster
M09	Door lock relay
M10	Digital clock
M11	Door unlock relay
M12	Door warning switch (W/O EPS)
M13	Door warning switch (With EPS)
M14-1	ETACM
M14-2	ETACM
M15	Front fog lamp switch
M17	Hazard switch
M18	Head lamp leveling switch
M19	Vertical resistor
M20	Ignition switch
M21	Immobilizer control module
M22	Defogger timer
M23	Joint connector
M24	Data link conector
M25-1	Multifunction switch (LHD)
M25-2	Multifunction switch (LHD)
M25-3	Multifunction switch
M25-4	Multifunction switch (RHD)
M25-5	Multifunction switch (RHD)
M26	Rheostat
M27	Rear fog lamp switch
M28	Rear defogger switch
M29	Seat belt timer
M30	Torque sensor
M37	Steering angle sensor
M38	Glove box lamp
M39	ODO trip mode switch
M40	Sear belt buzzer
M41	Joint connector
EM01	Connection with ENGINE harness
EM11	Connection with ENGINE harness
EM21	Connection with ENGINE harness
I/P-H	Connection with I/P JUNCTION BOX
I/P-J	Connection with I/P JUNCTION BOX
I/P-K	Connection with I/P JUNCTION BOX
I/P-L	Connection with I/P JUNCTION BOX
MA11	Connection with AIR BAG harness
MC01	Connection with CONTROL harness
MC11	Connection with CONTROL harness
MC21	Connection with CONTROL harness
MF11	Connection with FLOOR harness
MF21	Connection with FLOOR harness
MF31	Connection with FLOOR harness
MM01	Connection with CONSOLE EXT. harness
G18	Ground
G19	Ground
G20	Ground
G21	Ground
G22	Ground

CONSOLE EXT. HARNESS

M51	Cigarette lighter
M53	Power outlet #1
MM01	Connection with MAIN harness

suzlever@gmail.com

reveleus1

FLOOR & AIR BAG HARNESS (1)

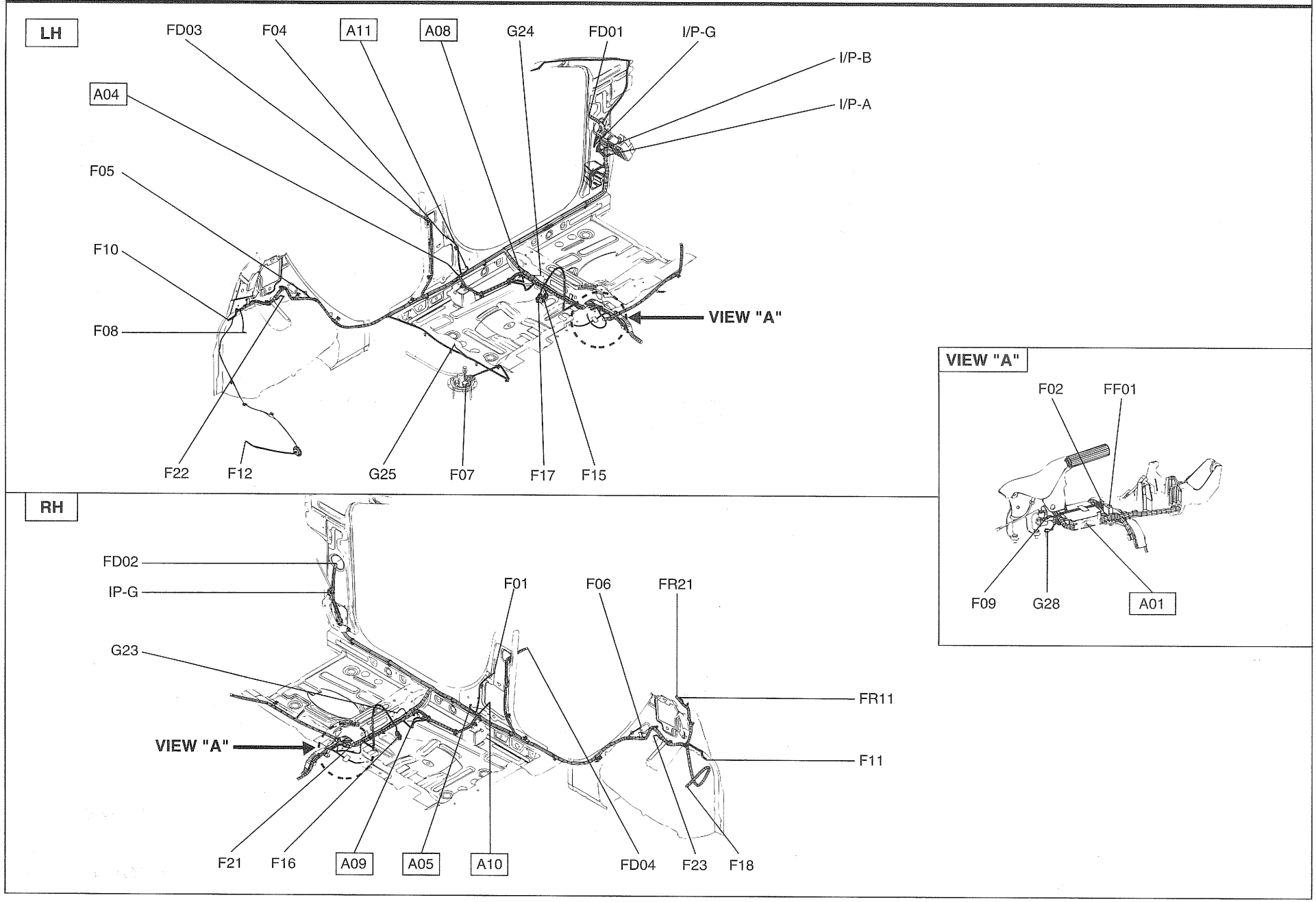

G5TBG002A

suzlever@gmail.com

reveleus1

FLOOR & AIR BAG HARNESS (2)

FLOOR HARNESS

F01	Assist door switch
F02	A/T shift lever switch
F04	Driver door switch
F05	Rear door switch LH
F06	Rear door switch RH
F07	Fuel sender & Fuel pump motor
F08	Luggage lamp
F09	Parking brake switch
F10	Rear combination lamp LH
F11	Rear combination lamp RH
F12	Rear fog lamp
F13	Rear speaker LH (3DR)
F14	Rear speaker RH (3DR)
F15	Seat belt switch
F16	Assist seat warmer
F17	Driver seat warmer
F18	Power outlet #2
F21	Yawrate sensor
F22	Rear wheel sensor LH
F23	Rear wheel sensor RH
FD01	Connection with DRIVER DOOR harness
FD02	Connection with ASSIST DOOR harness
FD03	Connection with REAR DOOR harness (LH)
FD04	Connection with REAR DOOR harness (RH)
FF01	Connection with FLOOR EXT. harness
FR11	Connection with TAIL GATE EXT. harness
FR21	Connection with TAIL GATE EXT. harness
I/P-A	Connection with I/P JUNCTION BOX
I/P-B	Connection with I/P JUNCTION BOX
MF11	Connection with MAIN harness
MF21	Connection with MAIN harness
MF31	Connection with MAIN harness
G23	Ground
G24	Ground
G25	Ground

FLOOR EXT. HARNESS

F20	ESP switch
F31	Driver seat warmer switch
F32	Assist seat warmer switch
FF01	Connection with FLOOR EXT. harness

AIR BAG HARNESS

A01	SRS control module
A03	Driver air bag
A04	Driver seat belt pretensioner
A05	Passenger satellite sensor
A06	Passenger air bag cut off switch
A07	Passenger air bag
A08	Driver side air bag
A09	Passenger side air bag
A10	Passenger seat belt pretensioner
A11	Driver satellite sensor
MA11	Connection with MAIN harness
G28	Ground

ROOF HARNESS

R02	Map lamp
R03	Room lamp
I/P-G	Connection with I/P JUNCTION BOX
RR01	Connection with SUNROOF harness

SUNROOF HARNESS

R04	Sunroof motor
R05	Overhead console assembly
R06	Sunroof controller
RR01	Connection with ROOF harness

suzlever@gmail.com

reveleus1

ENGINE HARNESS (1)

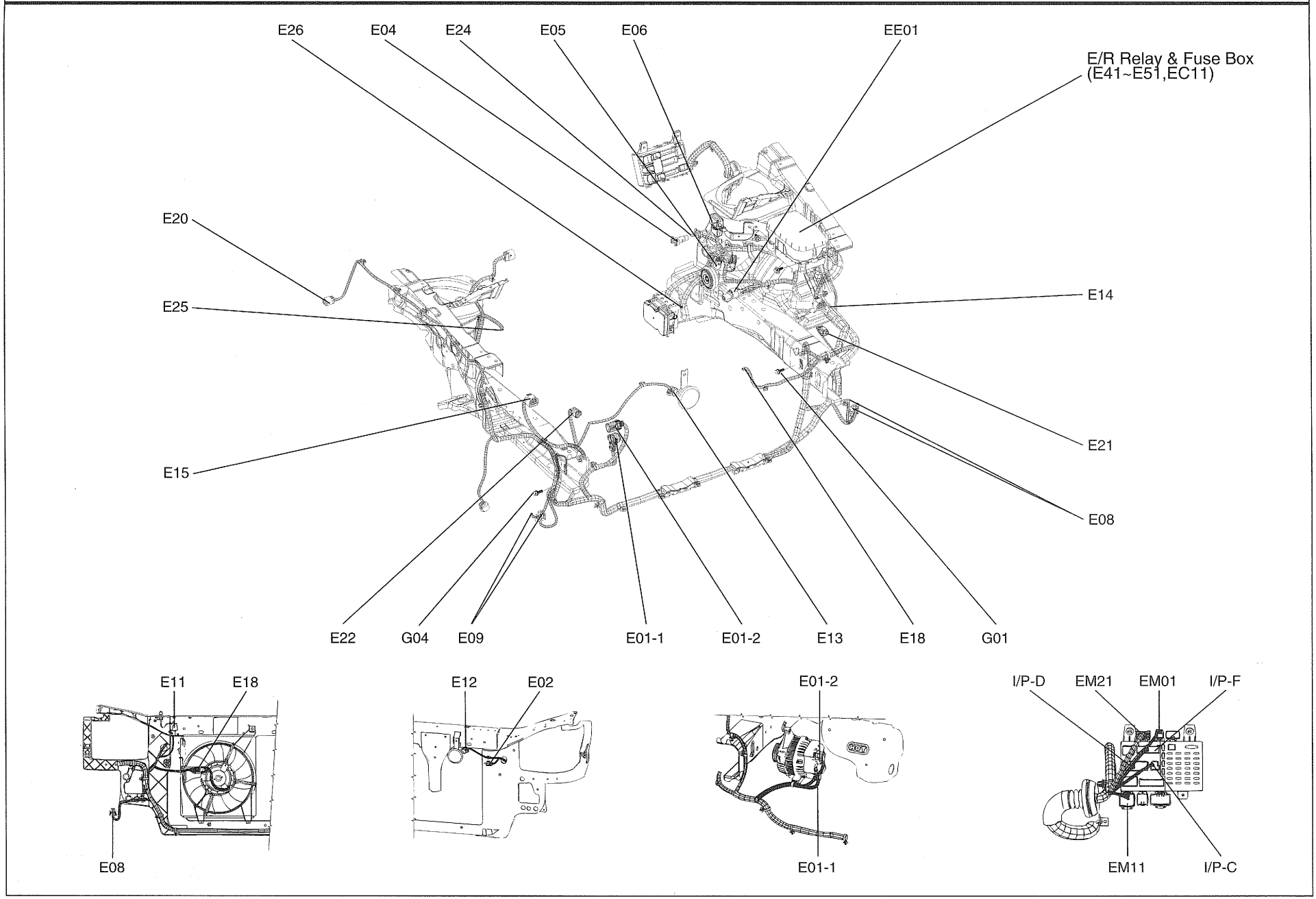

G5TBG003A

suzlever@gmail.com

reveleus1

ENGINE HARNESS (2)

ENGINE HARNESS

E01-1	Generator (B+)
E01-2	Generator
E02	Ambient sensor
E03	A/C compressor (GSL)
E04	Brake oil level sensor
E05	Burglar alarm horn
E06	Multipurpose check connector
E07	Fuel cut solenoid
E08	Front fog lamp LH
E09	Front fog lamp RH
E10	Front wiper motor (AUS)
E10	Front wiper motor (RHD)
E11	Hood switch
E12	Horn
E13	Horn (Dual)
E14	Head lamp LH
E15	Head lamp RH
E16	Joint connector
E17	Power steering switch
E18	Radiator fan motor
E19	Side repeater lamp LH
E20	Side repeater lamp RH
E21	Turn signal lamp LH
E22	Turn signal lamp RH
E23	Washer motor
E24	Front wheel sensor LH
E25	Front wheel sensor RH
E26	ABS control module
E27	ESP control module
E41	Blower relay
E42	Radiator fan relay #1
E43	A/C relay
E44	Horn relay
E45	Fuel pump relay
E46	Engine control relay
E47	Radiator fan relay #2
E48	Start relay
E49	Burglar alarm relay
E51	Fuel pump check connector
EE01	Connection with BATTERY harness
EE02	Connection with BATTERY harness
EE03	Connection with BATTERY harness
EC11	Connection with CONTROL harness
EC21	Connection with CONTROL harness (DSL)
EM01	Connection with MAIN harness
EM11	Connection with MAIN harness
EM21	Connection with MAIN harness
I/P-C	Connection with I/P JUNCTION BOX
I/P-D	Connection with I/P JUNCTION BOX
I/P-F	Connection with I/P JUNCTION BOX
G01	Ground
G02	Ground
G03	Ground
G04	Ground

BATTERY HARNESS (1.4L/1.6L)

E31	Start solenoid
E33	Back-up lamp switch
EE01	Connection with ENGINE harness

BATTERY HARNESS (1.1L)

E01-1	Generator (B+)
E01-2	Generator
E31	Start solenoid
E33	Back-up lamp switch
EE02	Connection with ENGINE harness

BATTERY HARNESS (DSL)

E01-1	Generator (B+)
E01-2	Generator
E03	A/C compressor
E31	Start solenoid
E32	Oil pressure switch
EE03	Connection with ENGINE harness

suzlever@gmail.com

reveleus1

CONTROL HARNESS (1.4L/1.6L) (1)

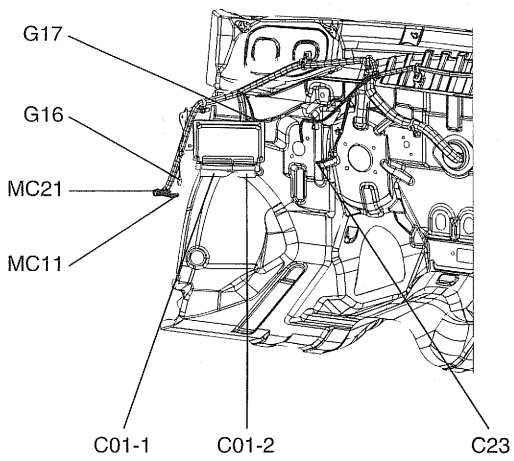

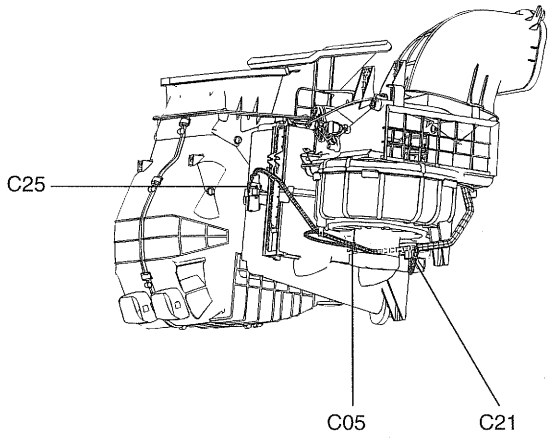

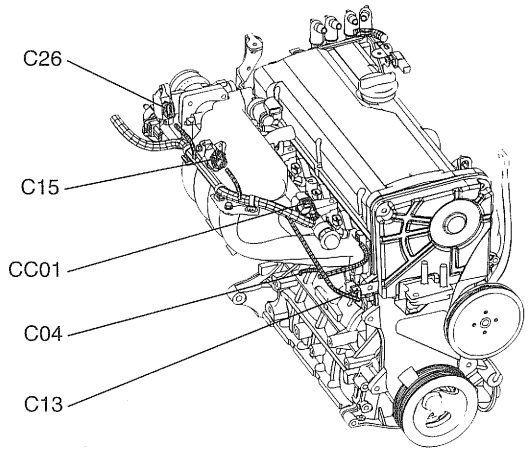

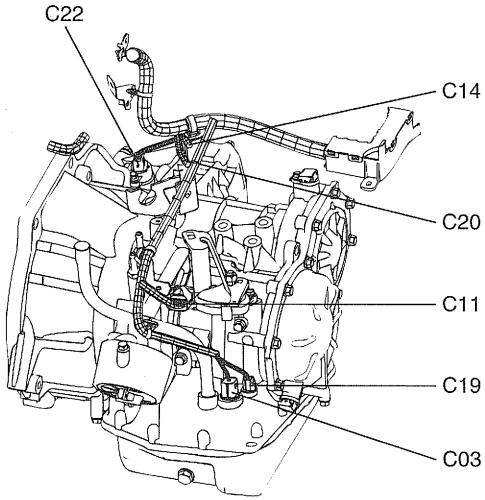

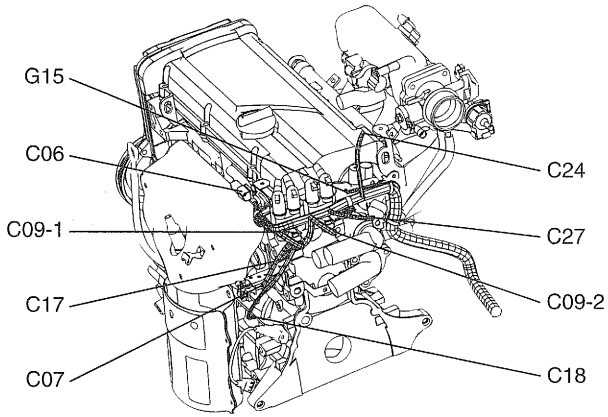

G5TBG004A

suzlever@gmail.com

CONTROL HARNESS (1.4L/1.6L) (2)

CONTROL HARNESS

C01-1	PCM
C01-2	PCM
C02	Accelerator sensor
C03	A/T solenoid valve
C04	A/C compressor
C05	Blower motor
C06	Condensor
C07	Crankshaft position sensor
C08	Front wiper motor
C09-1	Ignition coil #1
C09-2	Ignition coil #2
C10	A/C pressure transducer
C11	Transaxle range switch
C12	Ignition lock switch
C13	Knock sensor
C14	Kick down switch
C15	Manifold absolute pressure sensor
C16	Oxygen sensor (Down)
C17	Oxygen sensor (Up)
C18	Oil pressure switch
C19	Oil temperature sensor
C20	Pulse generator
C21	Blower resistor
C22	Vehicle speed sensor (A/T)
C22	Vehicle speed sensor (M/T)
C23	Stop lamp switch
C24	Camshaft position sensor
C25	Thermostatic switch
C26	Throttle position sensor
C27	Engine coolant temperature sensor & Sender
CC01	Connection with INJECTOR harness
EC11	Connection with ENGINE harness
MC11	Connection with MAIN harness
MC21	Connection with MAIN harness
G15	Ground
G16	Ground
G17	Ground

INJECTOR HARNESS

C51-1	Injector #1
C51-2	Injector #2
C51-3	Injector #3
C51-4	Injector #4
C52	Idle speed control actuator
C53	Canister purge solenoid valve
CC01	Connection with CONTROL harness

G5TBG004B

reveleus1

CONTROL HARNESS (1.1L) (3)

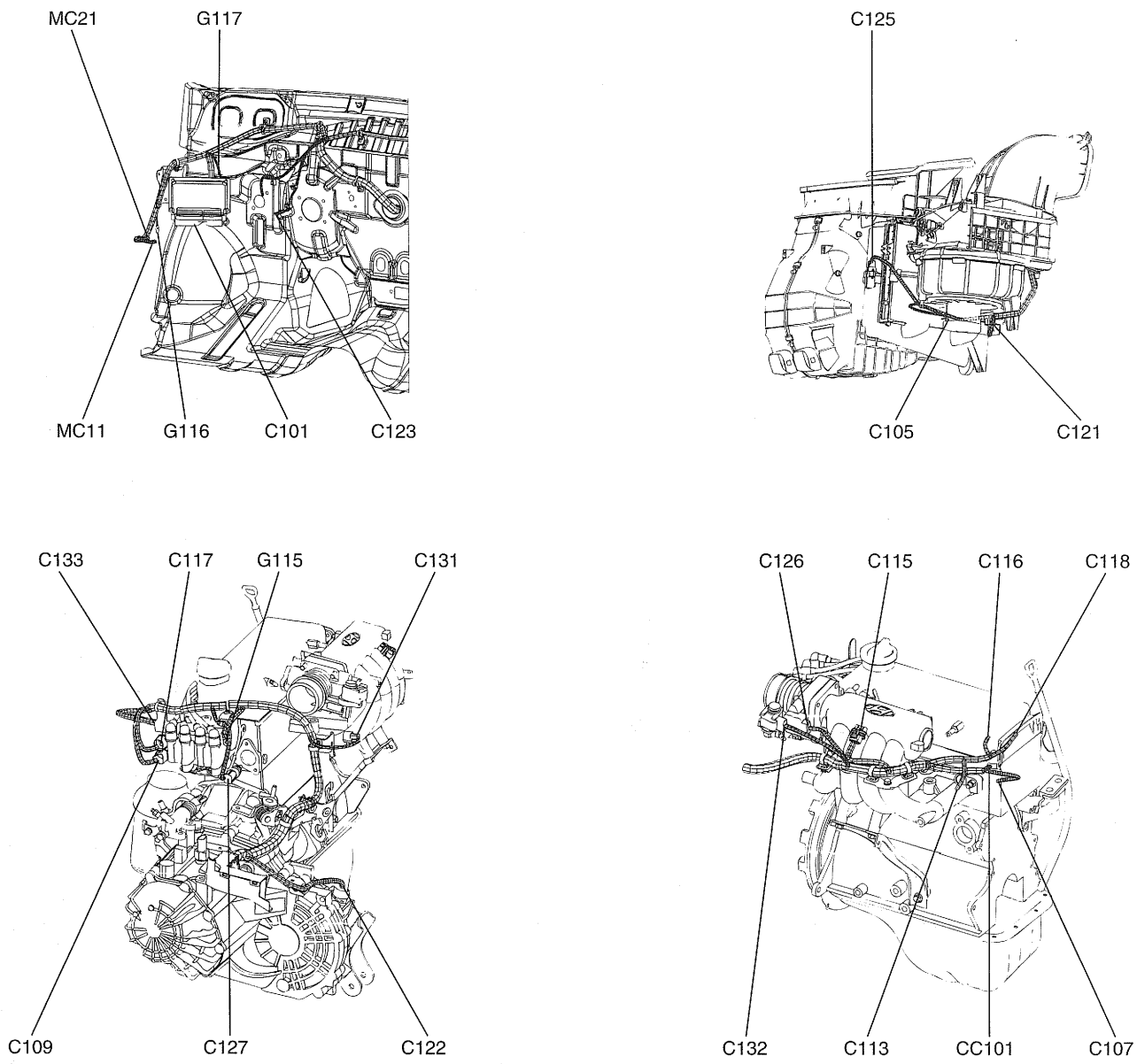

G5TBG004C

suzlever@gmail.com

CONTROL HARNESS (1.1L) (4)

CONTROL HARNESS

C101	ECM
C102	Accelerator sensor
C105	Blower motor
C107	Cranksahft position sensor
C108	Front wiper motor
C109	Ignition coil
C110	A/C pressure transducer
C113	Knock sensor
C115	Manifold absolute pressure sensor
C116	Oxygen sensor (Down)
C117	Oxygen sensor (Up)
C118	Oil pressure switch
C121	Blower resistor
C122	Vehicle speed sensor (M/T)
C123	Stop lamp switch
C124	Camshaft position sensor
C125	Thermostatic switch
C126	Throttle position sensor
C127	Engine coolant temperature sensor & Sender
C131	Canister purge solenoid valve
C132	Idle speed control actuator
CC101	Connection with INJECTOR harness
EC11	Connection with ENGINE harness
MC11	Connection with MAIN harness
MC21	Connection with MAIN harness
G115	Ground
G116	Ground
G117	Ground

INJECTOR HARNESS

C151-1	Injector #1
C151-2	Injector #2
C151-3	Injector #3
C151-4	Injector #4
CC101	Connection with CONTROL harness

CONTROL HARNESS (DSL) (5)

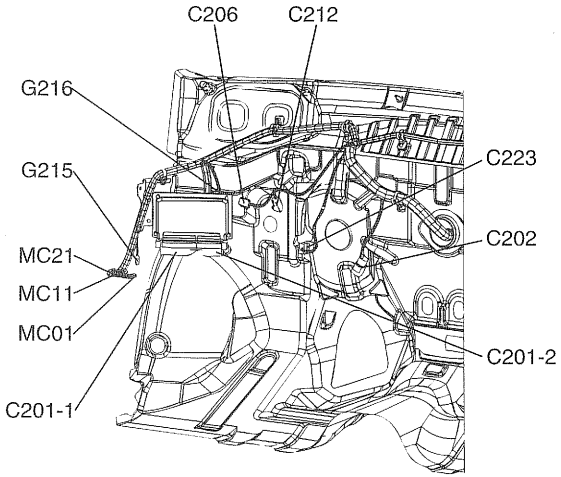

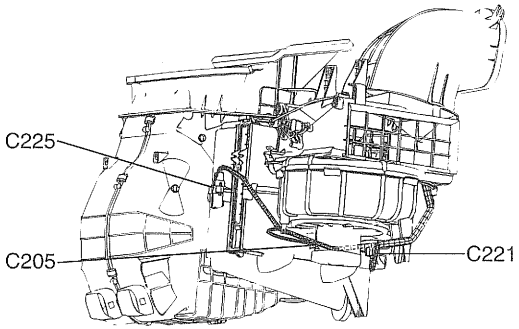

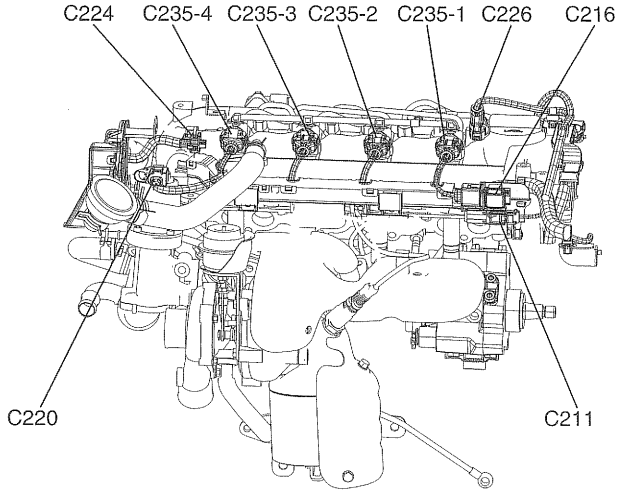

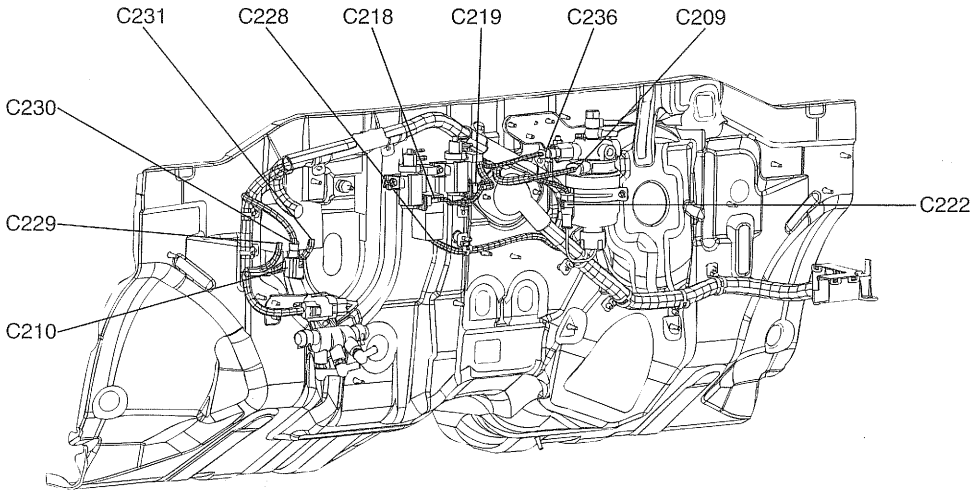

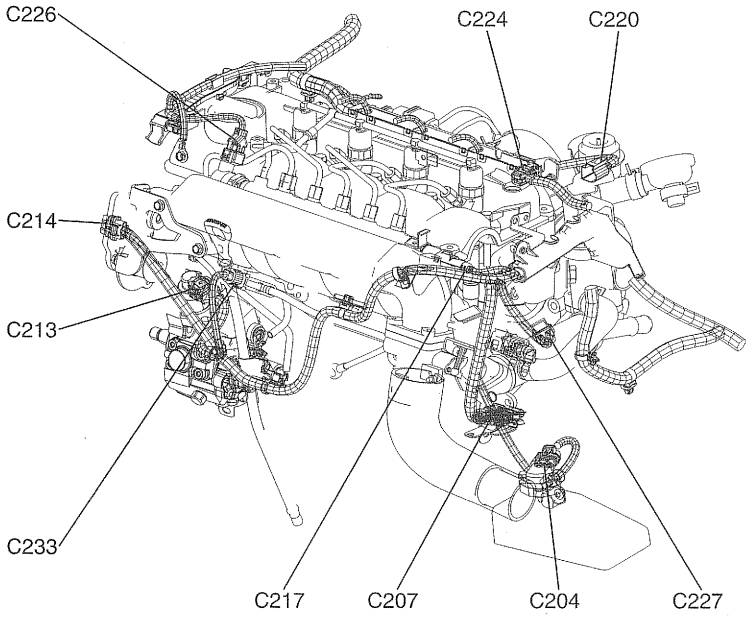

G5TBG004E

CONTROL HARNESS (DSL) (6)

CONTROL HARNESS

C201-1	ECM
C201-2	ECM
C202	Accelerator pedal sensor
C203	Fuel filter heater relay
C204	Boost pressure sensor
C205	Blower motor
C206	Clutch switch
C207	Crankshaft position sensor
C208	Front wiper motor
C209	Fuel filter heater
C210	A/C pressure transducer
C211	Glow plug
C212	Ignition lock switch
C213	Fuel pressure valve
C214	Variable swirl actuator
C215	Mass air flow sensor
C216	Lambda sensor
C217	Rail pressure sensor
C218	VGT actuator
C219	Throttle flap actuator
C220	EGR actuator
C221	Blower resistor
C222	Fuel filter warning switch
C223	Stop lamp switch
C224	Camshaft position sensor
C225	Thermostatic switch
C226	Rail pressure valve
C227	Engine coolant temperature sensor & Sender
C228	Glow plug relay
C229	PTC heater relay #1
C230	PTC heater relay #2
C231	PTC heater relay #3
C232	PTC heater control module
C233	Fuel temperature sensor
C234	PTC heater
C235-1	Injector #1
C235-2	Injector #2
C235-3	Injector #3
C235-4	Injector #4
C236	Fuel filter thermo switch
CC201	Connection with U-ENG EXT. harness
EC11	Connection with ENGINE harness
EC21	Connection with ENGINE harness
MC01	Connection with MAIN harness
MC11	Connection with MAIN harness
MC21	Connection with MAIN harness
G216	Ground
G215	Ground

ENG EXT. HARNESS

C241	Back-up lamp switch
C242	Neutral switch
C243	Vehicle speed sensor
CC201	Connection with CONTROL harness

suzlever@gmail.com

DOOR HARNESS E0025DA9

DOOR HARNESS (1)

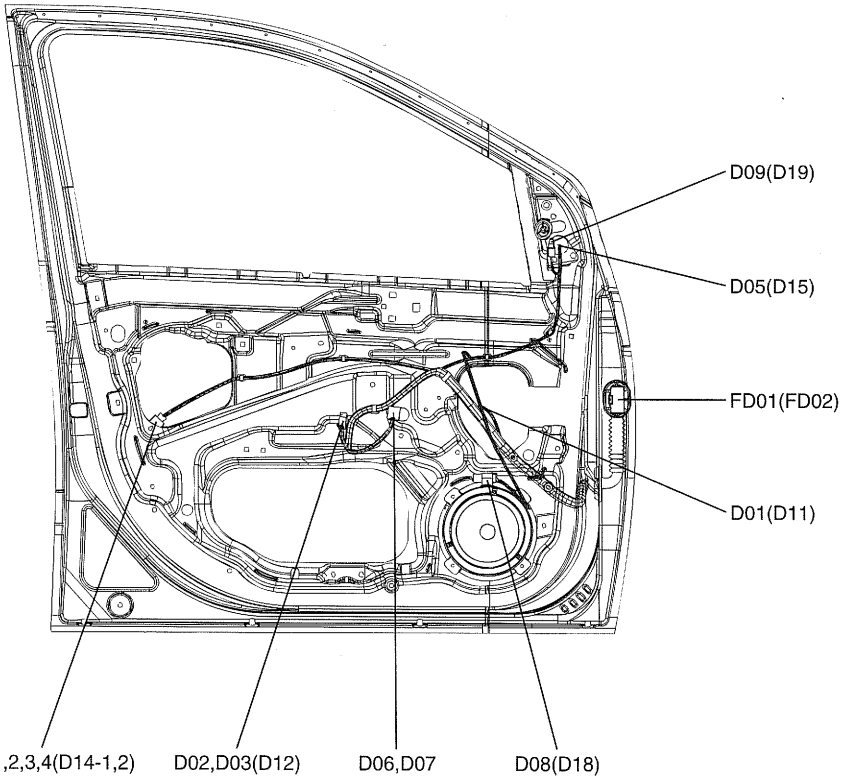

( ) : Assist

DRIVER DOOR HARNESS

D01	Driver power window motor
D02	Power window main switch (FR+RR)
D03	Power window main switch (FR)
D04-1	Driver door lock actuator (W/O ETACM,LHD)
D04-2	Driver door lock actuator (With ETACM,LHD)
D04-3	Driver door lock actuator (W/O ETACM,RHD)
D04-4	Driver door lock actuator (With ETACM,RHD)
D05	Driver outside mirror & Mirror folding motor
D06	Power outside mirror & Mirror folding switch
D07	Power outside mirror switch
D08	Driver speaker
D09	Driver tweeter speaker
FD01	Connection with FLOOR harness

ASSIST DOOR HARNESS

D11	Assist power window motor
D12	Assist power window switch
D14-1	Assist door lock actuator (LHD)
D14-2	Assist door lock actuator (RHD)
D15	Assist outside mirror & Mirror folding motor
D18	Assist speaker
D19	Assist tweeter speaker
FD02	Connection with FLOOR harness

G5TBG005A

DOOR HARNESS (2)

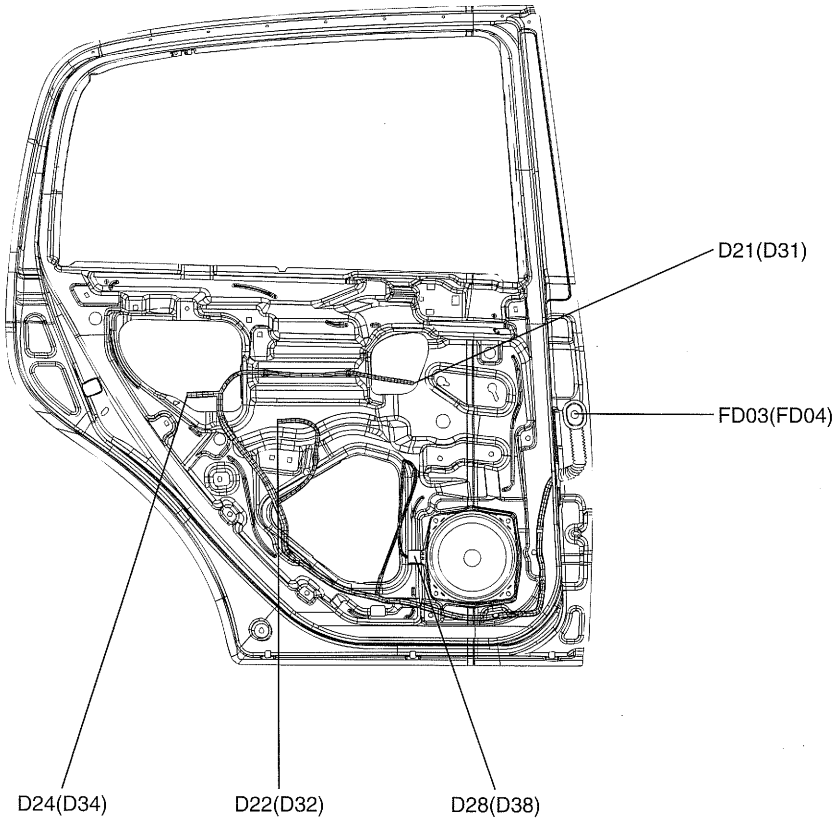

( ) : RH

REAR DOOR HARNESS LH

D21	Rear power window motor LH
D22	Rear power window switch LH
D24	Rear door lock actuator LH
D28	Rear speaker LH
FD03	Connection with FLOOR harness

REAR DOOR HARNESS RH

D31	Rear power window motor RH
D32	Rear power window switch RH
D34	Rear door lock actuator RH
D38	Rear speaker RH
FD04	Connection with FLOOR harness

G5TBG005B

TAIL GATE HARNESS EFB0B04F

TAIL GATE HARNESS (1)

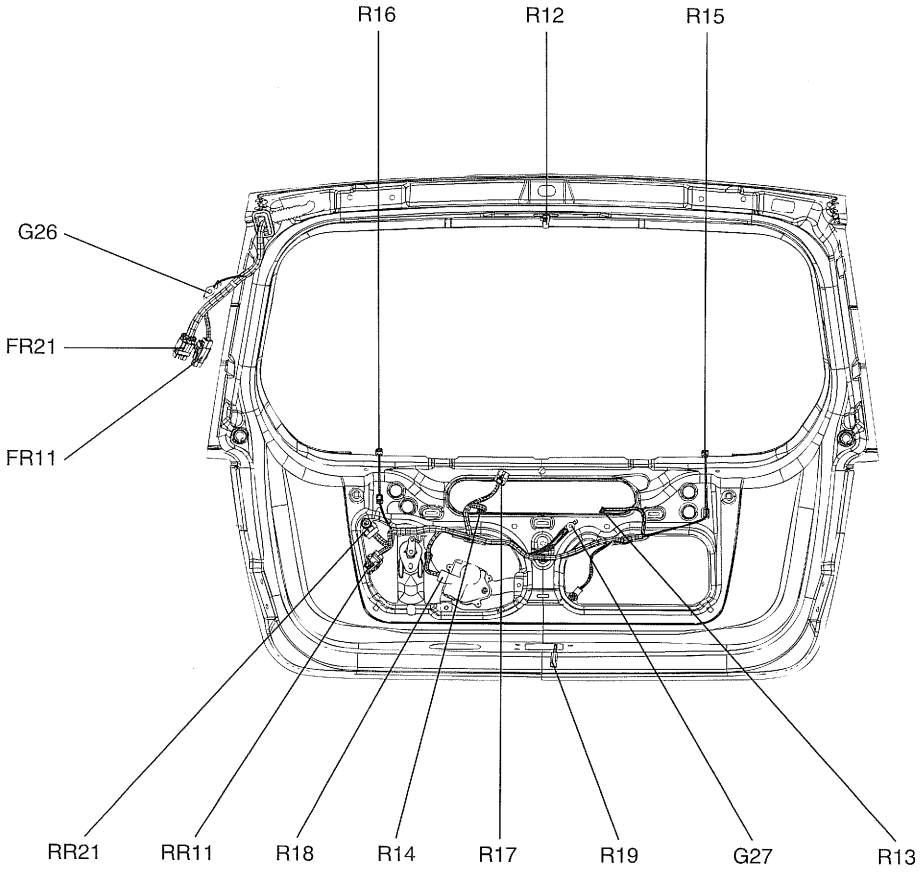

TAIL GATE HARNESS

R13	License lamp LH
R14	License lamp RH
R15	Rear window defogger (-)
R16	Rear window defogger (+)
R17	Rear wiper motor
R18	Tail gate lock actuator
R19	Tail gate switch
RR11	Connection with TAIL GATE EXT. harness
RR21	Connection with TAIL GATE EXT. harness
G27	Ground

TAIL GATE EXT. HARNESS

R11	High-mounted stop lamp (Glass)
R12	High-mounted stop lamp (Spoiler)
FR11	Connection with FLOOR harness
FR21	Connection with FLOOR harness
RR11	Connection with TAIL GATE harness
RR21	Connection with TAIL GATE harness
G26	Ground

G5TBG006A